Mo Tu We Th Fr Sa Su

Date / /

25-4-26

→ Cadence Virtuose (software)

↳ custom cell flow ↳ Research software

Creating custom cell

↓

Then later turned into standard cell, then used in RTL → GDSII flow

Goal Project : CMOS inverter

Deadline 27-4-26

Need to prepare

1. Github repo
2. Report
3. Images along screenshot

Library name:

Varsh_lib

Technology file (Need to fix first)

↳ tell how process & layout rules will

: Here gpdk90

Mo Tu We Th Fr Sa Su Date / /

(Generic PdK)

To do list 25-4-26

→ Cadence CMOS inverter simulation (schematic)

Day1: schematic + DC & transient simulation

Day2: layout + DRC + LVS + Github

→ ES manual ~~Conclusions~~ Exp 1 - 07

→ ~~ES manual Quiz~~.

Cadence (software)

- Analog domain
  Tool - virtuoso
  1) CKT
  2) symbol
  3) Test symbol by Test CKT
  4) simulation (analysing the result

- Digital Domain
  Coding - Verilog HDL
  Tool: Incisive, Encounter RTL compiler, Encounter

Incisive
- * Code testbench
- * func simulation
- * Graph / results
- * Generate Reports
  - TAP parameters
  - Timing, Area, power Reports

Encounter RTL compiler for reports

Mo Tu We Th Fr Sa Su Date / /

{ Digital Domain }

Always trade off b/w TAP parameters

By Reducing ~~Area~~ delay, Area & Power might increase

↳ Analyzing the diff. b/w two reports

Technology files: 180nm, 90nm, 45nm

↓

Channel length

Channel length & Channel width

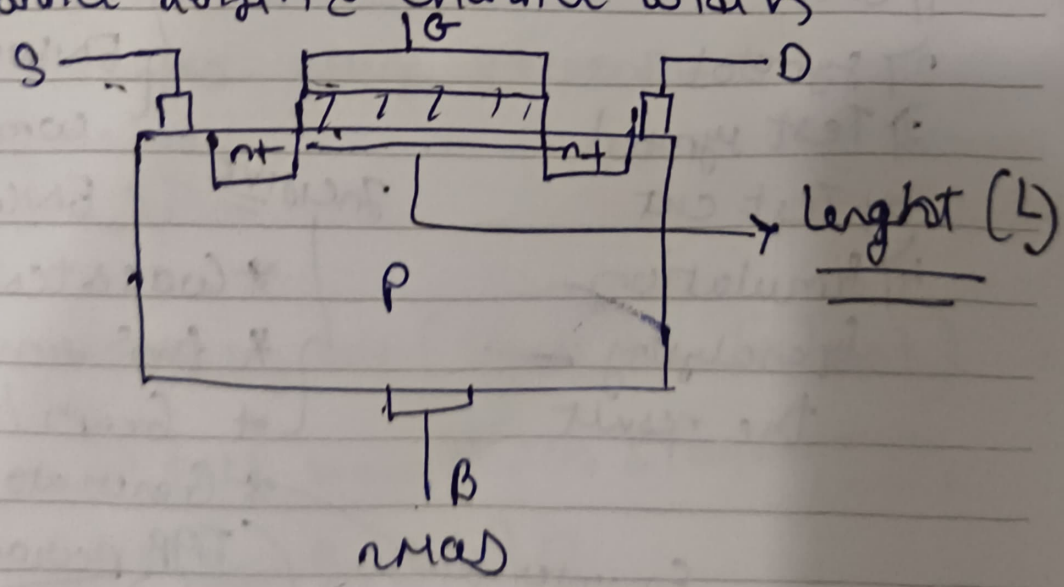

Library

180nm ⇒ MOSFET length L = 180nm

90nm ⇒ " " length L = 90nm

45nm ⇒ " " L = 45nm

gpdk180, gpdk90, gpdk45

↓

Generic files in nature

↓

Results obtain are estimating useful for research purpose.

→ Industry : TSMC files = 28nm

Mo Tu We Th Fr Sa Su

Date / /

Project → Virtuoso Tool

CMOS Inverter -: gpdk 90

* Schematic

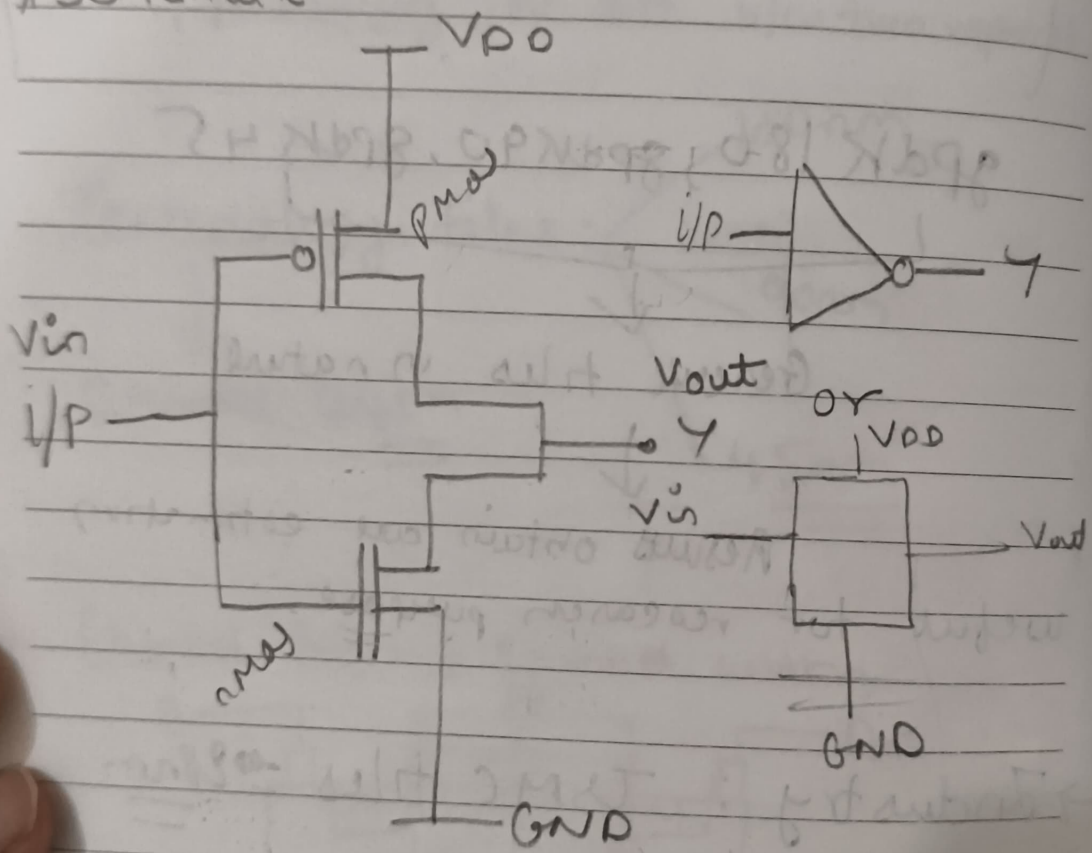

i/p	o/p
0	1
1	0

Mo Tu We Th Fr Sa Su Date / /

* Generating symbol from schematic

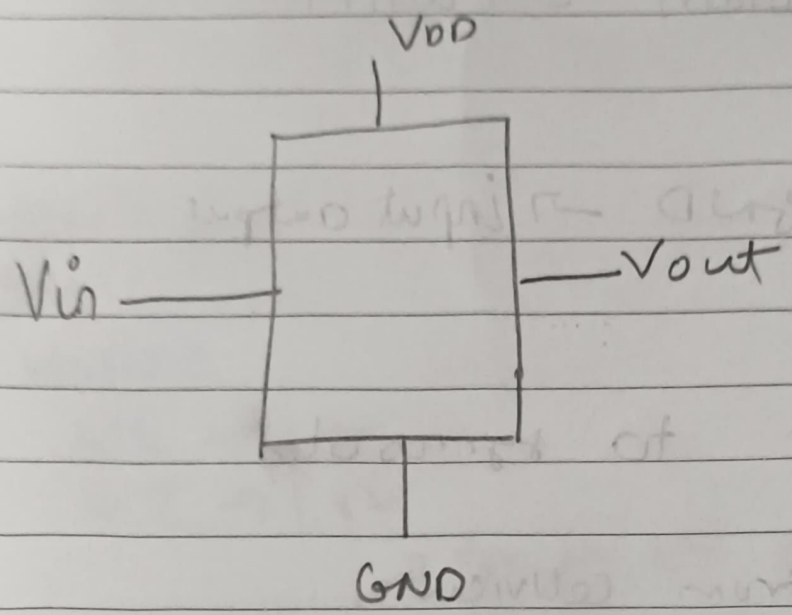

* Testing the Symbol by Test ckt

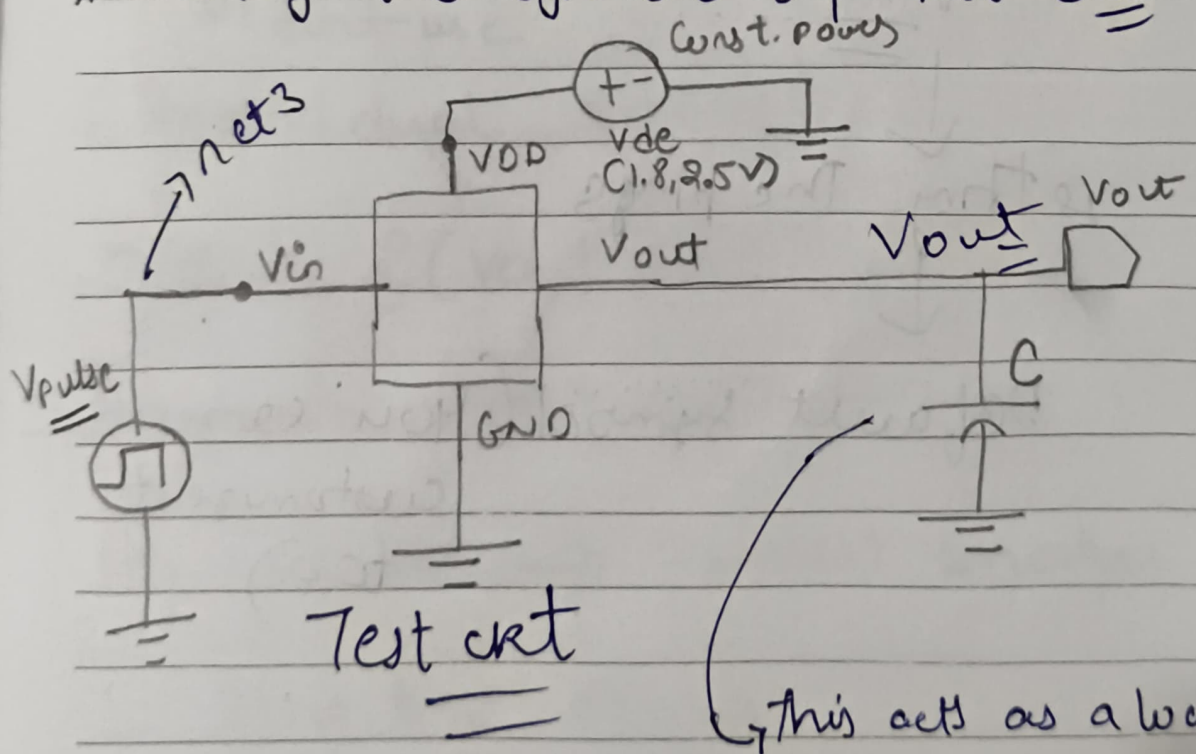

this acts as a loop & cannot be designed without load.

Mo Tu We Th Fr Sa Su

Date / /

nMos length = 100nm
width = 120nM

VDD GND → input output

→ Schematic to symbol

Cellview from cellview
↓
~~symbol~~
↓
setting the pings
↓
Default symbol (you can customize it too)

Mo Tu We Th Fr Sa Su Date / /

→ Testing symbol with Test ckt

~~DC & transient analysis~~

specification
for
Vpulse
V1 → 0V
V2 → 1.8V

→ for small design use

Vdd / Vdc (which choose)
↳ dont use

(Individual ground pins)

O/P → P (Vout pin)

→ Analysing Test ckt

As inverter → transient analysis

Stop time 500n
Accurate →
Delay 0ns

Mo Tu We Th Fr Sa Su

Date / /

DC analysis

Save dc operating point

Sweep variable

↓

Component parameter

Here i/p is vpulse.

Sweep range

Start → 0 — 1.8V

Taken

net3 & O/P pin (dc analysis

↳ Why we choose → to verify the CMOS inverter fun^c ✓✓

Vout

when i/p (net3) is High → o/p (low)

o/p (net3) is low → o/p (High)

Mo Tu We Th Fr Sa Su Date / /

Changed
stop time 200ns

Transient Response

DC analysis Response

Graphs

Note:-
500ns - 500,000,000ns
too long & slow the simulation

Switching Points → 720mV

$$\frac{VDD}{2} = \frac{1.8}{2}$$

V1 → low level impulse
V2 → high level impulse